ASSEMBLY INSTRUCTION

A*1

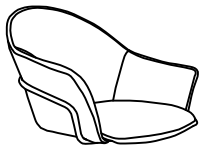

B*1

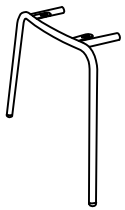

C*1

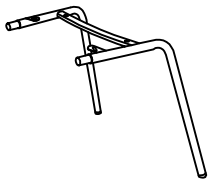

D*4

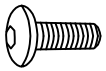

M6*20mm

E*2

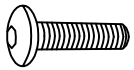

M6*32mm

F*1

①

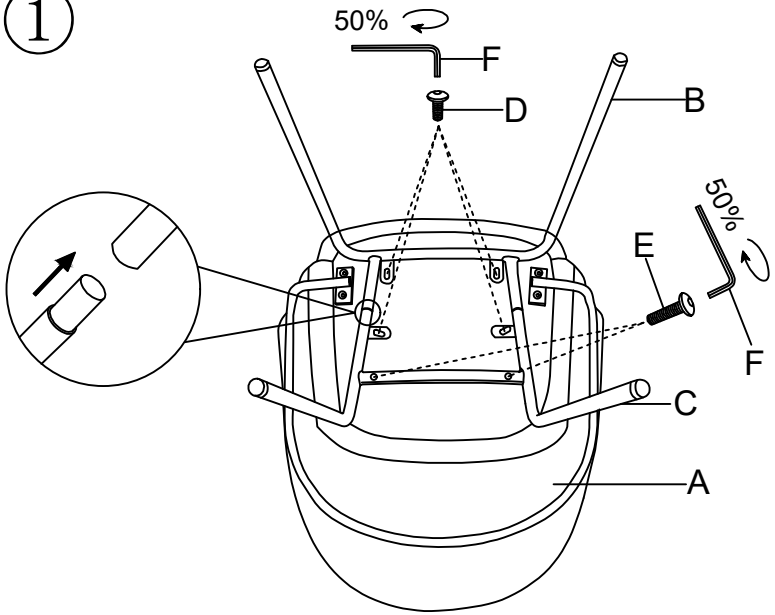

②

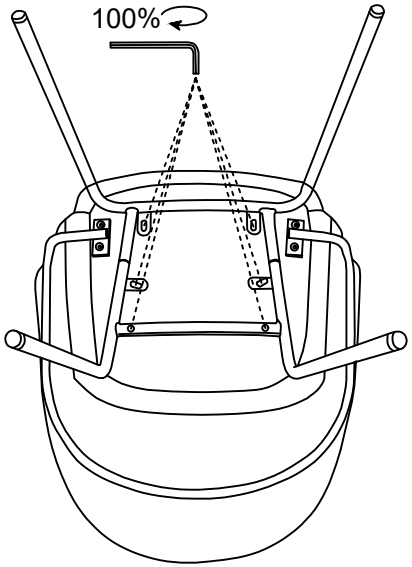
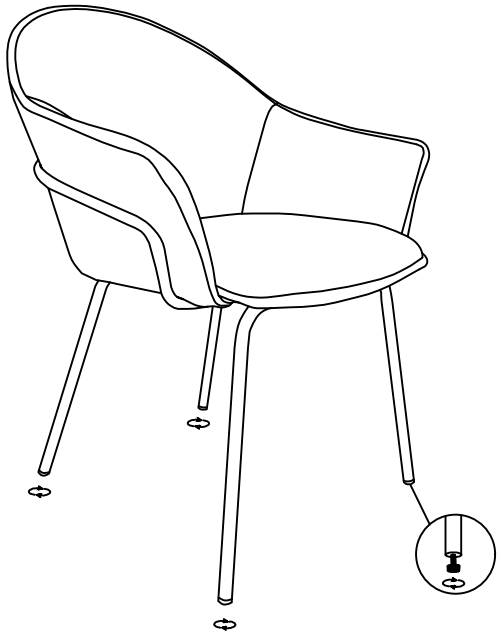
③